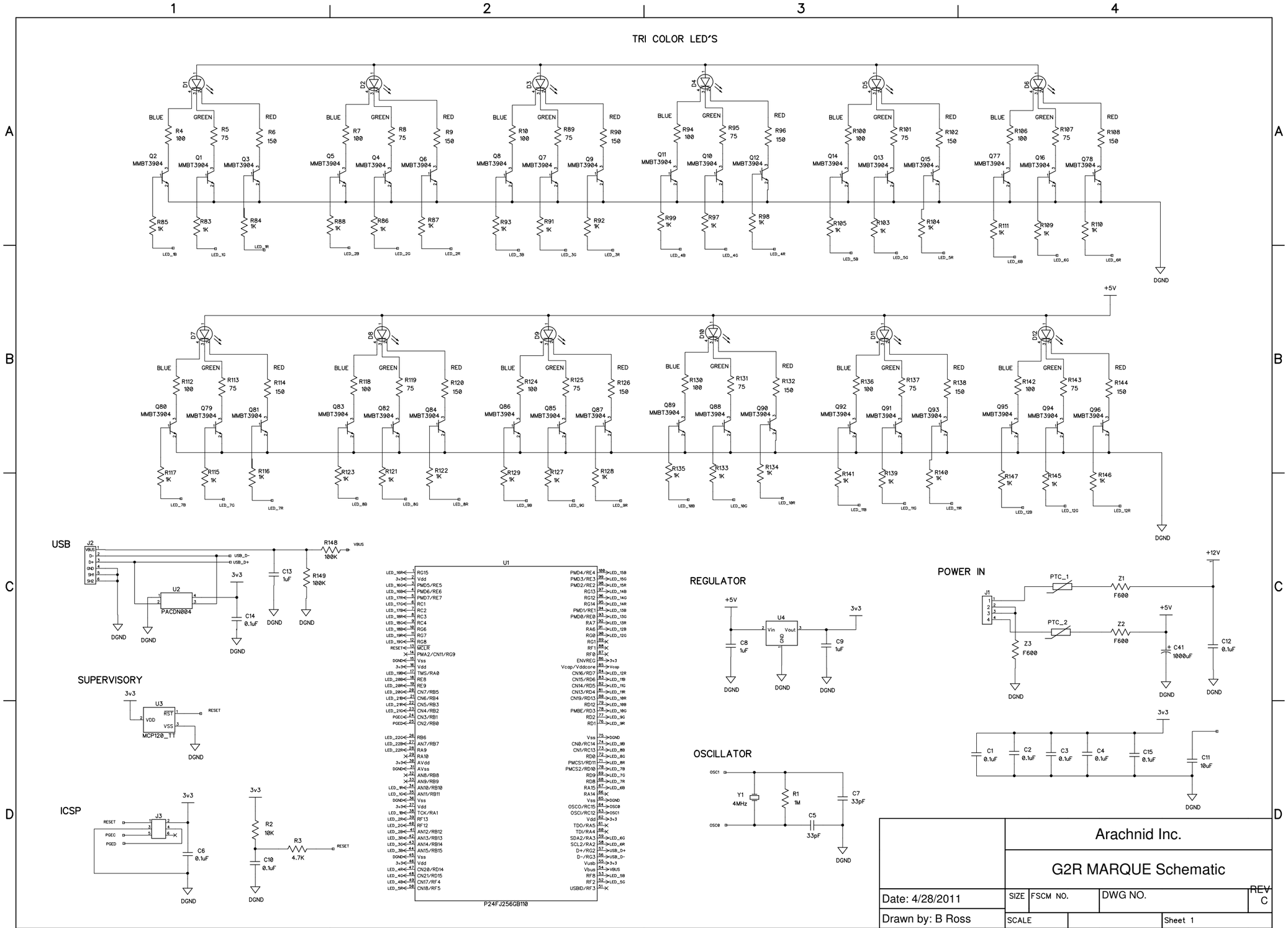
TRI COLOR LED'S
BLUE
GREEN
RED
MMBT3904
DGND
+5V
USB
PACDN004
VBUS
USB_D-
USB_D+
3v3
SUPERVISORY
MCP120_T1
RESET
ICSP
PGEC
PGED
U1
P24FJ256GB110
REGULATOR
U4
Vin
Vout
GND
OSCILLATOR
Y1
4MHz
POWER IN
PTC_1
PTC_2
+12V
Arachnid Inc.
G2R MARQUE Schematic
Date: 4/28/2011
Drawn by: B Ross
SIZE
FSCM NO.
DWG NO.
REV
C
SCALE
Sheet 1

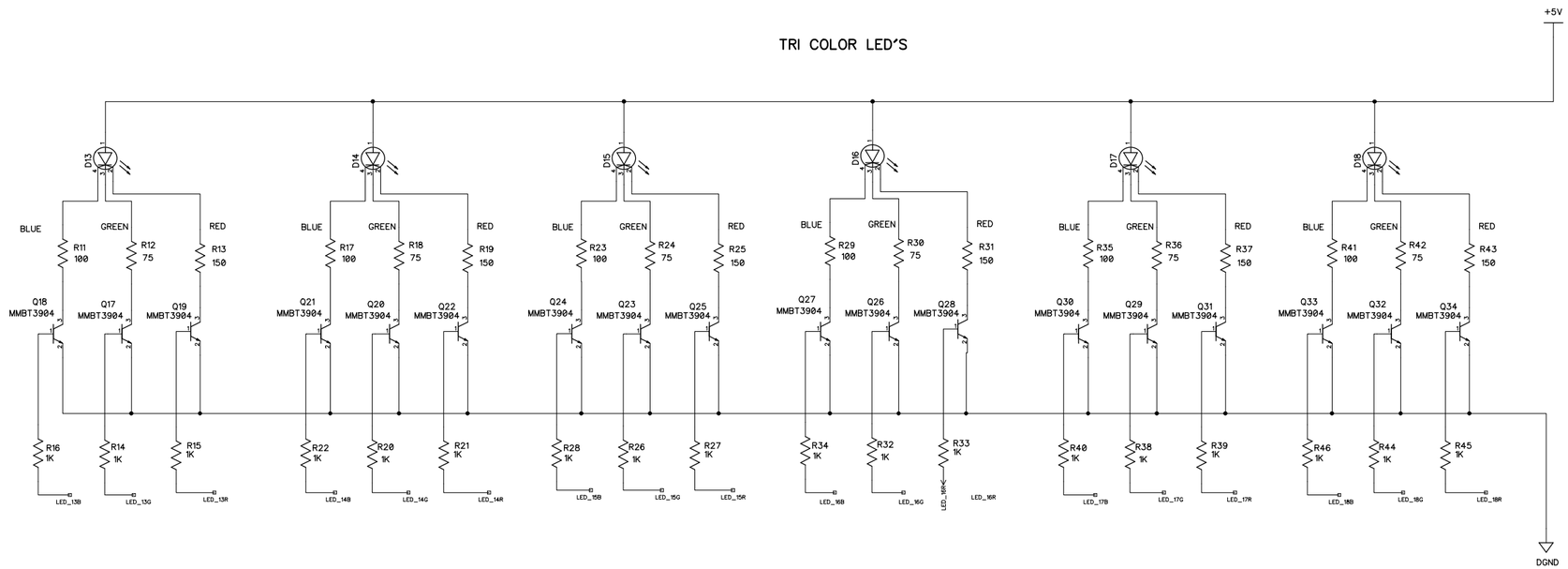

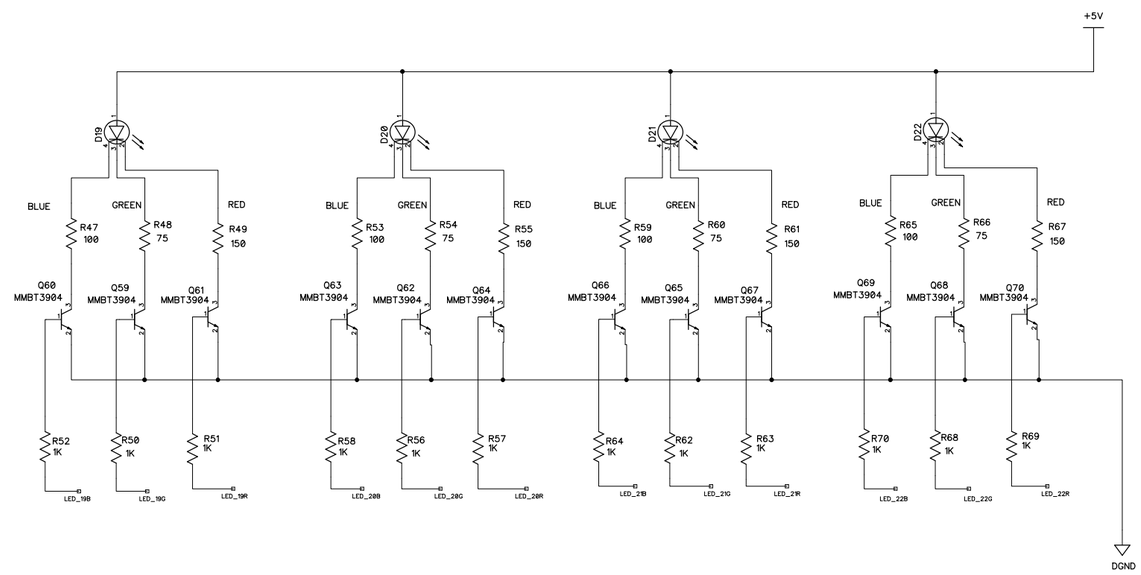

	Arachnid Inc.			
	G2R LED RGB Schematic			
	SIZE	FSCM NO.	DWG NO.	REV
	SCALE		Sheet 2	